0JWT. 303. 269 | REV - | SHEET 1 of 1

THE SIZES INDICATED ARE METRIC SIZE(mm).
图中所标尺寸为米制尺寸.

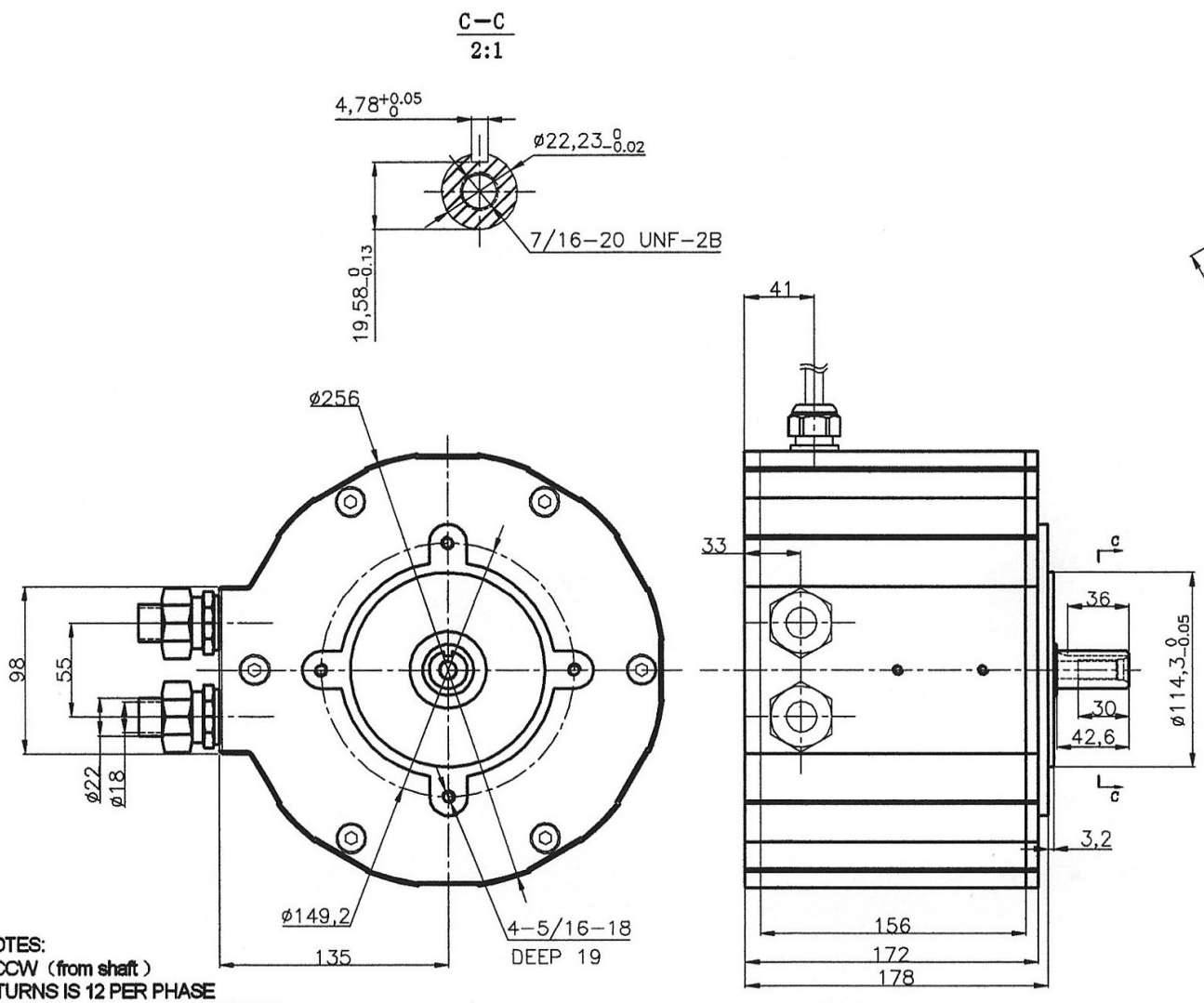

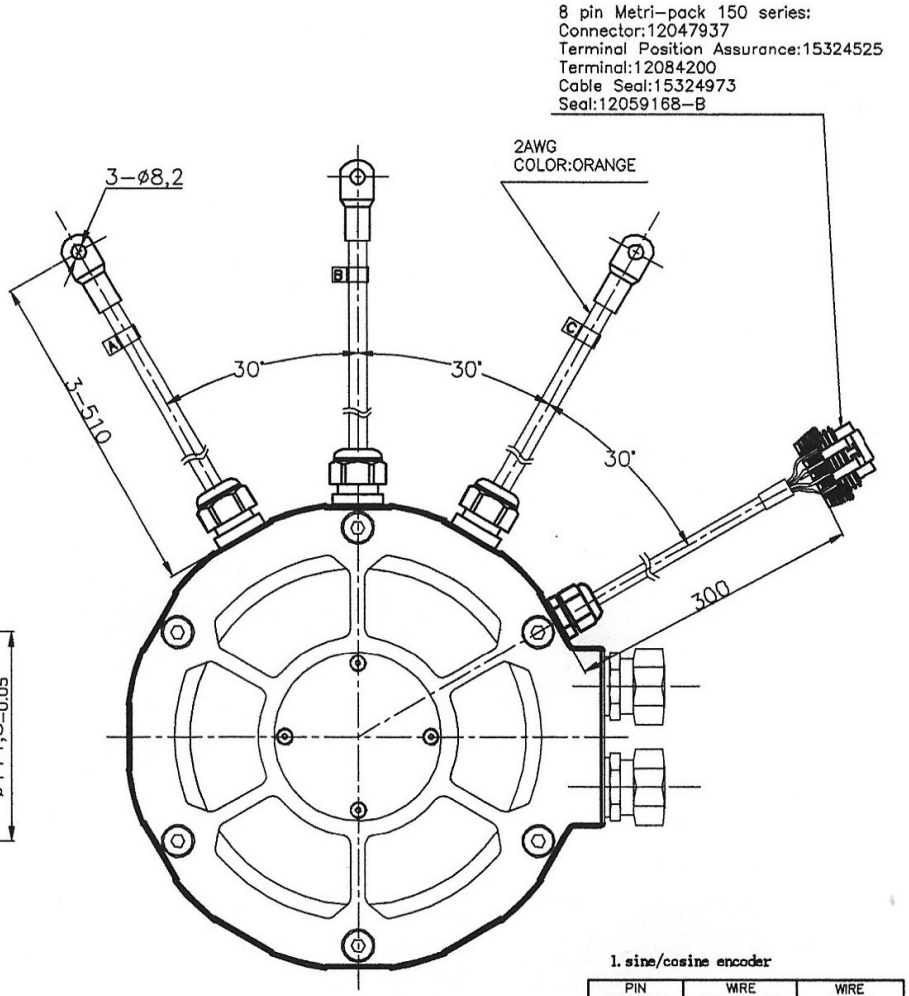

NOTES:
1. CCW (from shaft)
2. TURNS IS 12 PER PHASE
3. Motor Phase Resistance is 0.0027Ω
4. Motor inductance at 1000Hz is mH
5. Sensor magnet is to be 2.5mm to 3mm from the sensor mounting face. The minimum amplitude for the sensor is 2 volts AC, peak to peak.
6. Class H insulation system.

NAMECARD DATA
PART # ME1616
DATE CODE XXXXXX
SERIAL #:XX.XX.XXXX
Motenergy, Inc.
Wisconsin, USA

1. sine/cosine encoder

PIN LOCATION 插孔点	WIRE DESIGNATION 导线标记	WIRE COLOR 导线颜色
A	Cosine(余弦)	WHITE白
B	Sine(正弦)	BLUE蓝
C	Ground (0)	BLACK黑
D	N/C	
E	V_{cc} (+5V)	RED红
F	Shield(保护)	GREEN绿
G	Temp1	YELLOW(-)黄
H	Temp2	YELLOW(+)黄

CHANGES	BY	ECO NO.	DATE
-	-	-	-
-	-	-	-
-	-	-	-
-	-	-	-
-	-	-	-
-	-	-	-
-	-	-	-
-	-	-	-

DO NOT SCALE DRAWING
THIS DRAWING IS PROPRIETARY PROPERTY OF MOTENERGY INC CORPORATION DISCLOSED IN CONFIDENCE, WHICH MAY NOT BE USED OR DISCLOSED WITHOUT PERMISSION. RETURN PROMPTLY AFTER USE.

DIMENSIONING AND TOLERANCING PER ANSI Y14.5M-1994
CLASSIFICATION OF CHARACTERISTICS
CRITICAL (C):
EMMISIONS (E):
MAJOR (M):

MATERIAL
S/N: CODE:
MODEL NO:
SIM TO:

TITLE
OUTLINE
永磁式无刷直流盘式电动机
外 形 图

DRAWN:	bp	16.10.09
APPR:		
DEPT:		
SCALE	-	

DESIGN VENDOR: -
0JWT. 303. 269
REV -